Use of XML for a Medical Education Curriculum Database

Levinson A, Bousfield J, McKibbon M, Bayley L, Otchere Y, Green P, Garside S

Michael G DeGroote School of Medicine
at McMaster University

Who are we?

- McMaster University Medical School
  - PBL, curriculum renewal process
  - DME
- Who am I?
  - Director, e-Learning; Coordination group
  - Educational research chair
  - Provincial and National groups

Objectives

- Dynamic ‘Table of Contents’ of objectives and activities throughout the program
  - Searchable
    - customizable queries, capable of being filtered and sorted

Reports

- Potential for different reports
  - visualizations/maps – presentation layers
- Print and Web
- Output to CurrMIT and for LCME

Standards

- Conformant with Standards, interoperable
  - link to Curriculum Management System and specific learning objects
  - external taxonomies (CurrMIT; Medbiquitous (eg LOM); MeSH)
  - user management systems for access permissions and different roles

Future Web Services

- federated searching of repositories and question banks
  - HEAL, MedEdPortal
  - links to UMLS or other meta-thesaurus for topic ‘mapping’
- New competency frameworks
  - Eg National Clinical Skills Document

Architecture

Admin

- PHP and mySQL DB
- AJAX and XML-XSL for display

XML

- Via mySQL using classes from PHP
- Web services

Flex

- Standard and custom components
- Consumes XML from DB and web services

Presentation Layer - Summary

Browse Build Search Reports Help Logout

Activities by Block | Assessment | MF Activity | PC Activity | Add Tab | Close Tab

Respirology - Week 2

- Part 1
  - Medical Foundation 1
    - Determinants of Health
    - Respirology
      - Respirology - Week 1
      - Respirology - Week 2
      - Respirology - Week 3
      - Respirology - Week 4
      - Respirology - Week 5
    - Cardiology
    - Hematology
    - MF1 Integration
  - Professional Competencies 1
- Part 2
- Part 3
- Part 4
- Part 5
- Clerkship
  - Anesthesia Clerkship Rotation
  - Emergency Medicine Clerkship Rotation

Activities: Respirology - Week 2

Vital Signs and General Appearance (Groups 7-14)
This activity has no description.

End of Life Care-Part 2
Historical Perspectives, Definitions of Palliative EOL

Kaitlin McPherson
Kaitlin McPherson is a 2 year old girl who has been previously

Edwin McKenzie
Edwin is a 4 year old boy, enjoying a day at the local Fall

Ron Chen
Ron Chen is a 25 year old computer sciences post-

Details | Keywords

Activity
Kaitlin+McPherson

Activity Type
Tutorial

Professional Competency?
no

Assessment?
no

Description
Kaitlin McPherson is a 2 year old girl who has been previously well. She has had a barky, seal-like cough for 2 days but tonight has become acutely worse.In the emergency room, she is found to be sitting \"bolt upright\", with pronounced stridor on inspiration.

Objectives
Understand the anatomy of the upper airway, with particular emphasis on the pediatric airway.
Students should be able to explain the clinical features of upper airway

Presentation Layer - Taxonomy

Browse Build Search Reports Help Logout

Activities by Block | Assessment | MF Activity | PC Activity | Add Tab | Close Tab

Respirology - Week 2

- Part 1
  - Medical Foundation 1
    - Determinants of Health
    - Respirology
      - Respirology - Week 1
      - Respirology - Week 2
      - Respirology - Week 3
      - Respirology - Week 4
      - Respirology - Week 5
    - Cardiology
    - Hematology
    - MF1 Integration
  - Professional Competencies 1
- Part 2
- Part 3
- Part 4
- Part 5
- Clerkship
  - Anesthesia Clerkship Rotation
  - Emergency Medicine Clerkship Rotation

Activities: Respirology - Week 2

Vital Signs and General Appearance (Groups 7-14)

This activity has no description.

End of Life Care-Part 2

Historical Perspectives, Definitions of Palliative EOL

Kaitlin McPherson

Kaitlin McPherson is a 2 year old girl who has been previously

Edwin McKenzie

Edwin is a 4 year old boy, enjoying a day at the local Fall

Ron Chen

Ron Chen is a 25 year old computer sciences post-

Details | Keywords

Taxonomy	Keyword
Curriculum Block	Respirology - Week 2
Curriculum Week	Week 3
MeSH	Airway Resistance [E01.370.386.700.050]
MeSH	Airway Resistance [G09.772.765.060]
MeSH	Cough [C23.888.852.293]
MeSH	Dyspnea [C23.888.852.371]
MeSH	Glottis [A04.329.364]
MeSH	Posture [G11.427.713.700]
MeSH	Respiratory Function Tests [E01.370.386.700]
MeSH	Respiratory Sounds [C23.888.852.779]
MeSH	Respiratory Sounds [E01.370.386.720]
MeSH	Respiratory Sounds

Presentation – Browse CanMeds

Browse Build Search Reports Help Logout

Activities by CanMeds Role | Assessment | MF Activity | PC Activity | Add Tab | Close Tab

Communicator

- Collaborator
- Communicator
- Health Advocate
- Manager
- Medical Expert
- Professional
- Scholar

Activities: Communicator

Effective Communication
Each ProComp Group will be provided with six (6)

Effective Communication
Each ProComp Group will be provided with six (6)

Effective Communication
Each ProComp Group will be provided with six (6)

Effective Communication
Each ProComp Group will be provided with six (6)

Lifelong Learning Reflective Practice Exercise
The session will begin with a

Communication with Simulated Patients
This session will provide your group with the opportunity to

Communication with

Details | Keywords

Activity
Effective Communication

Activity Type
PC Session

Professional Competency?
yes

Assessment?
no

Description
Each ProComp Group will be provided with six (6) simulated patients (SPs) over the course of these three sessions. These SPs will portray live interactive scenarios that simulate varying medical problems and communication challenges.

Objectives
1- Recognize that being a good communicator is an essential function of a physician, and understand that effective patient-physician communication can foster patient

Presentation – Browse by Week

Browse Build Search Reports Help Logout

Activities by Week | Assessment | MF Activity | PC Activity | Add Tab | Close Tab

Week 2

- Part 1
- Part 2
  - Week 1
  - Week 2
  - Week 3
  - Week 4
  - Week 5
  - Week 6
  - Week 7
  - Week 8
- Part 3
- Part 4
- Part 5

Activities: Week 2

GI CPC
There will be one CPC for the entire class at intervals,

Hepatobiliary Physiology
This activity has no description.

Intoduction to Anatomy Lab Resources
This activity has no description.

Undifferentiated Abdominal Pain-An ER Perspective
This activity has no description.

Genetics-CF Interpretation of Molecular Genetic Te...
This activity has no description.

Gastrointestinal Radiology
This activity has no description.

Lifelong Learning

Details | Keywords

Activity
GI CPC

Activity Type
Clinical Pathology Conferences (CPC)

Professional Competency?
no

Assessment?
no

Description
There will be one CPC for the entire class at intervals, approximately once every 3-4 weeks throughout the entire preclinical curriculum. The format will be that of modified classic CPC. Students may be called on to discuss the relevant clinical features with guidance from the expert.

Objectives
The Clinicopathology Conference (CPC) is a longstanding practice where clinicians are informed of the pathological findings that may have

Presentation – Browse by MeSH

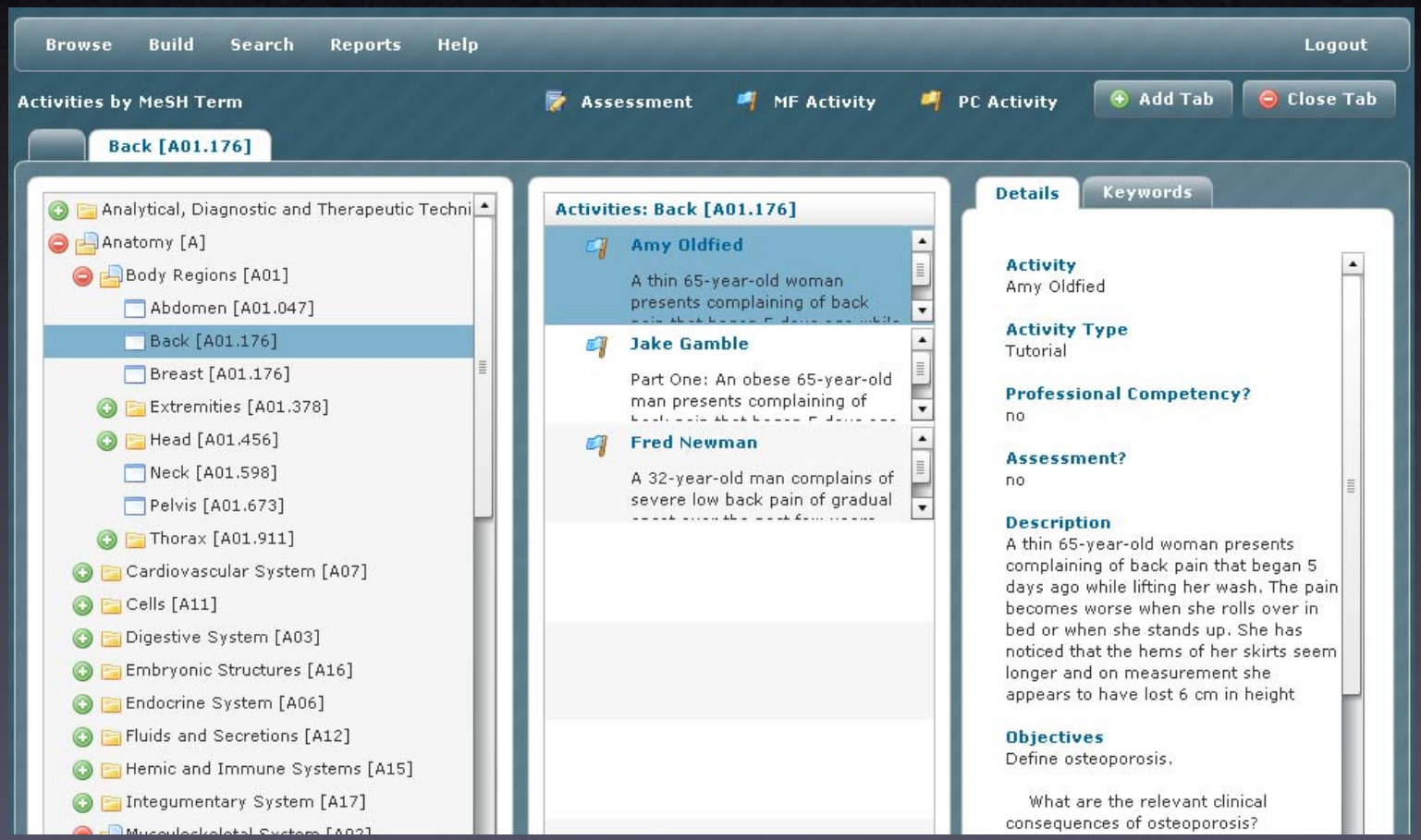

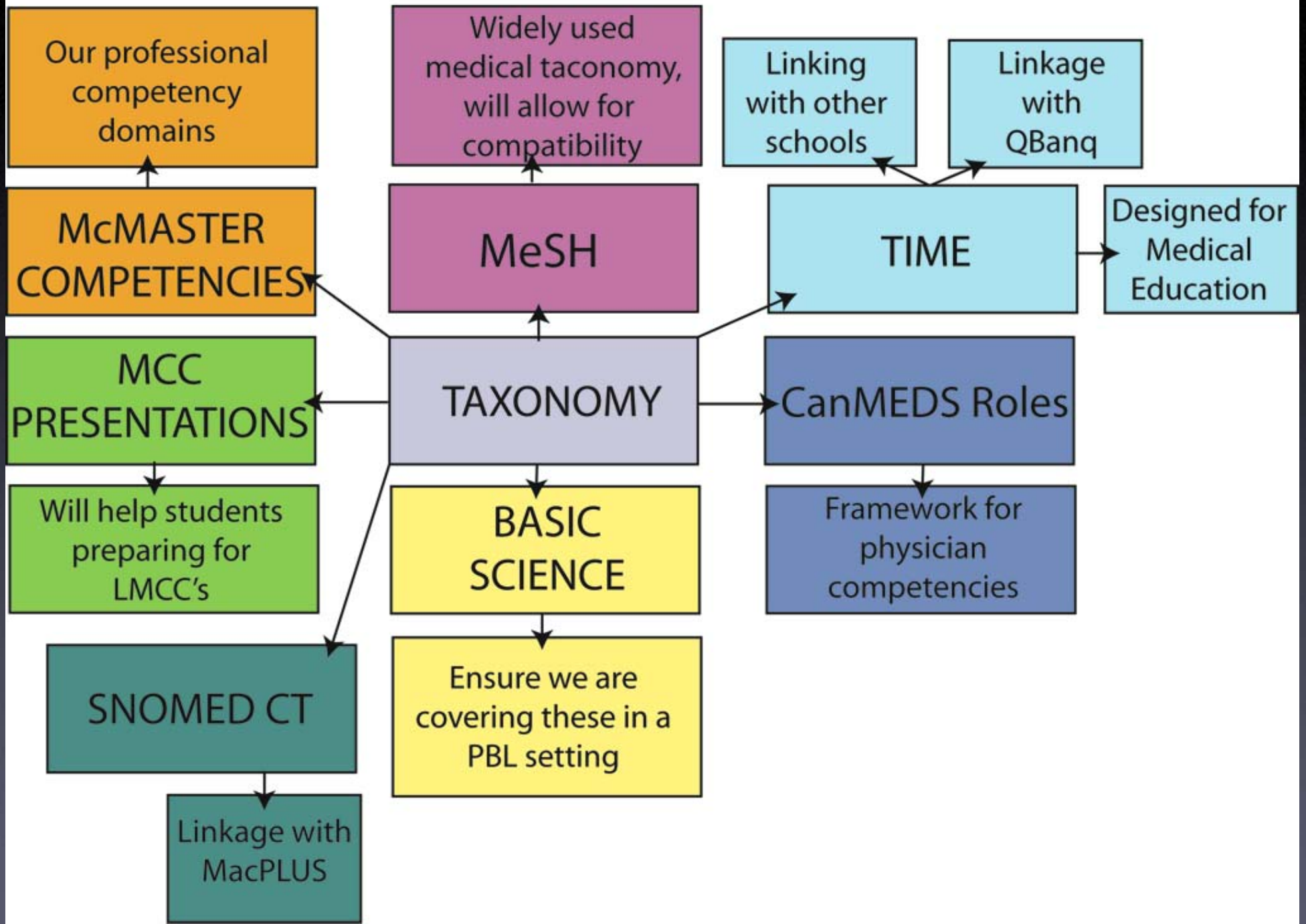
Our professional competency domains
Widely used medical taconomy, will allow for compatibility
Linking with other schools
Linkage with QBanq
McMASTER COMPETENCIES
MeSH
TIME
Designed for Medical Education
MCC PRESENTATIONS
TAXONOMY
CanMEDS Roles
Will help students preparing for LMCC's
BASIC SCIENCE
Framework for physician competencies
SNOMED CT
Ensure we are covering these in a PBL setting
Linkage with MacPLUS

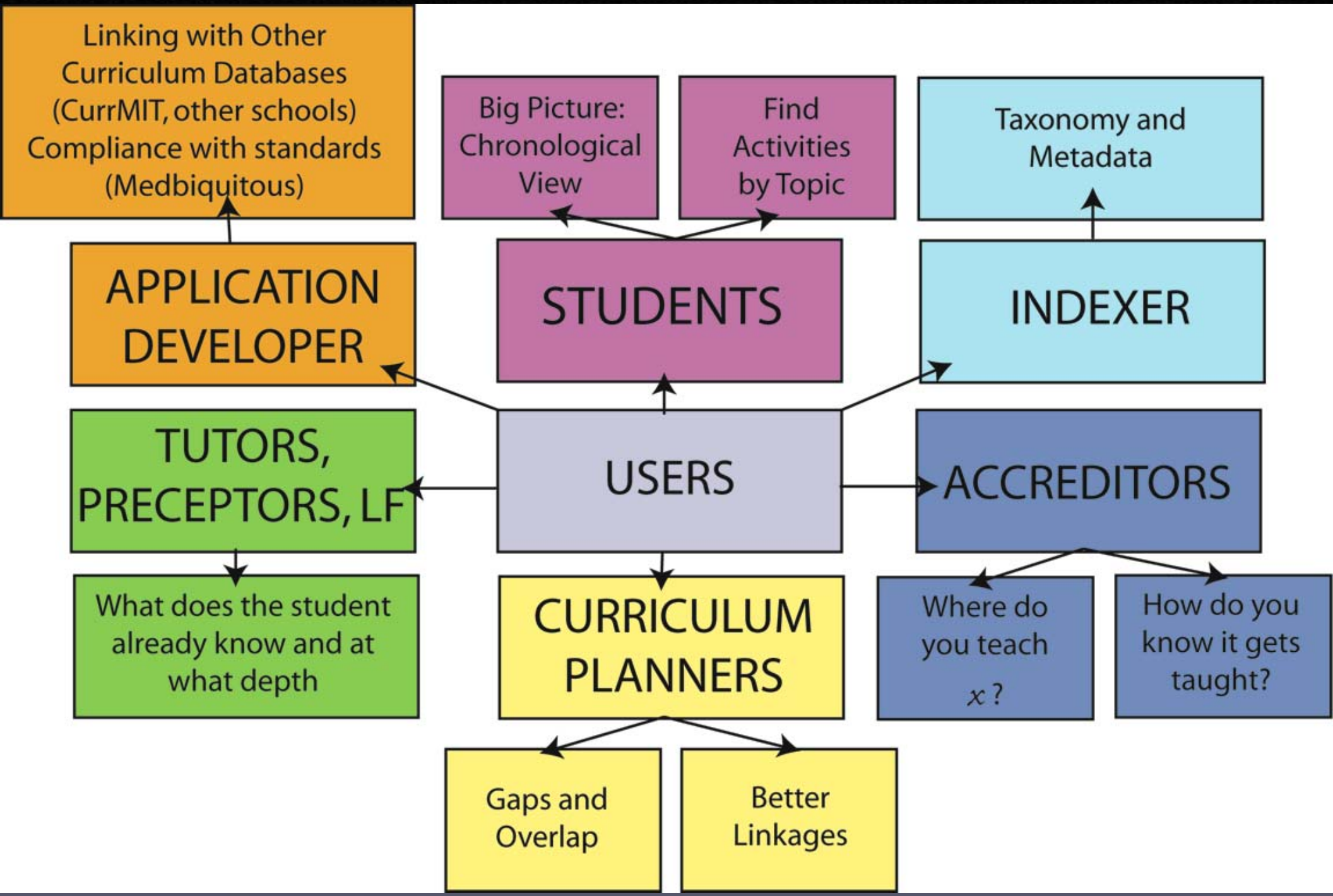
Linking with Other Curriculum Databases (CurrMIT, other schools) Compliance with standards (Medbiquitous)
Big Picture: Chronological View
Find Activities by Topic
Taxonomy and Metadata
APPLICATION DEVELOPER
STUDENTS
INDEXER
TUTORS, PRECEPTORS, LF
USERS
ACCREDITORS
What does the student already know and at what depth
CURRICULUM PLANNERS
Where do you teach x ?
How do you know it gets taught?
Gaps and Overlap
Better Linkages

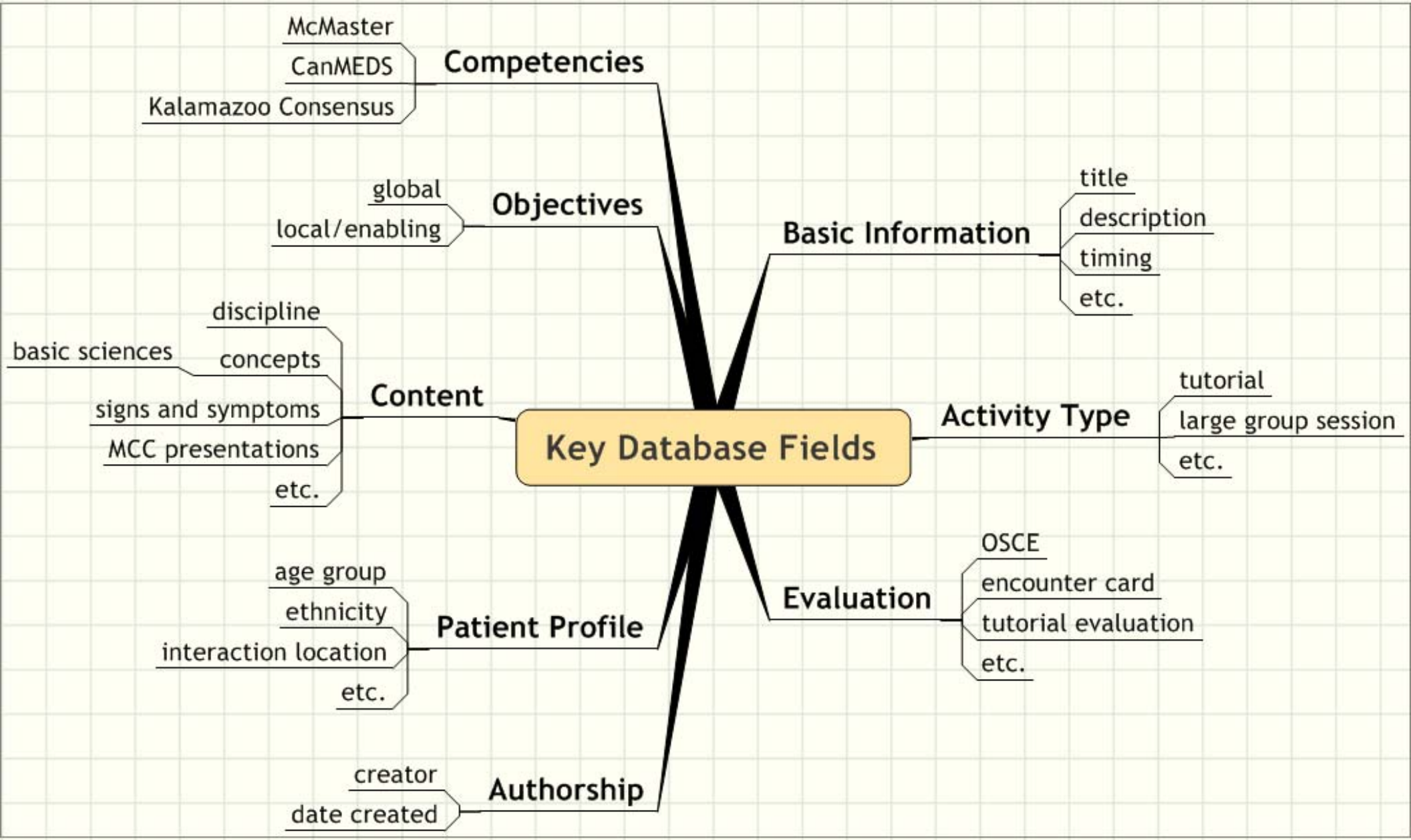
Key Database Fields
Competencies
McMaster
CanMEDS
Kalamazoo Consensus
Objectives
global
local/enabling
Content
discipline
basic sciences
concepts
signs and symptoms
MCC presentations
etc.
Patient Profile
age group
ethnicity
interaction location
etc.
Authorship
creator
date created
Basic Information
title
description
timing
etc.
Activity Type
tutorial
large group session
etc.
Evaluation
OSCE
encounter card
tutorial evaluation
etc.

Pre-Clerkship

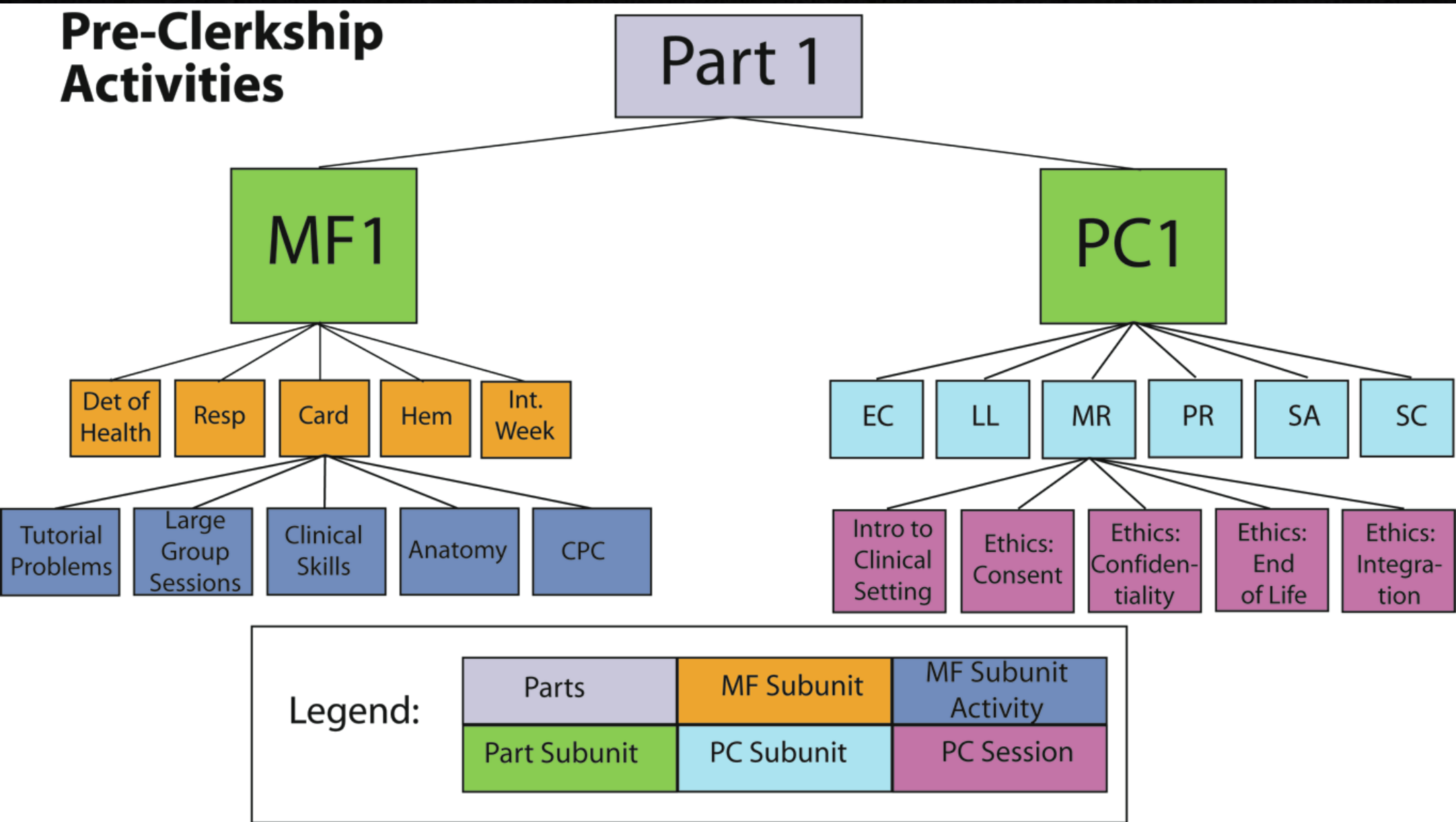

Granularity

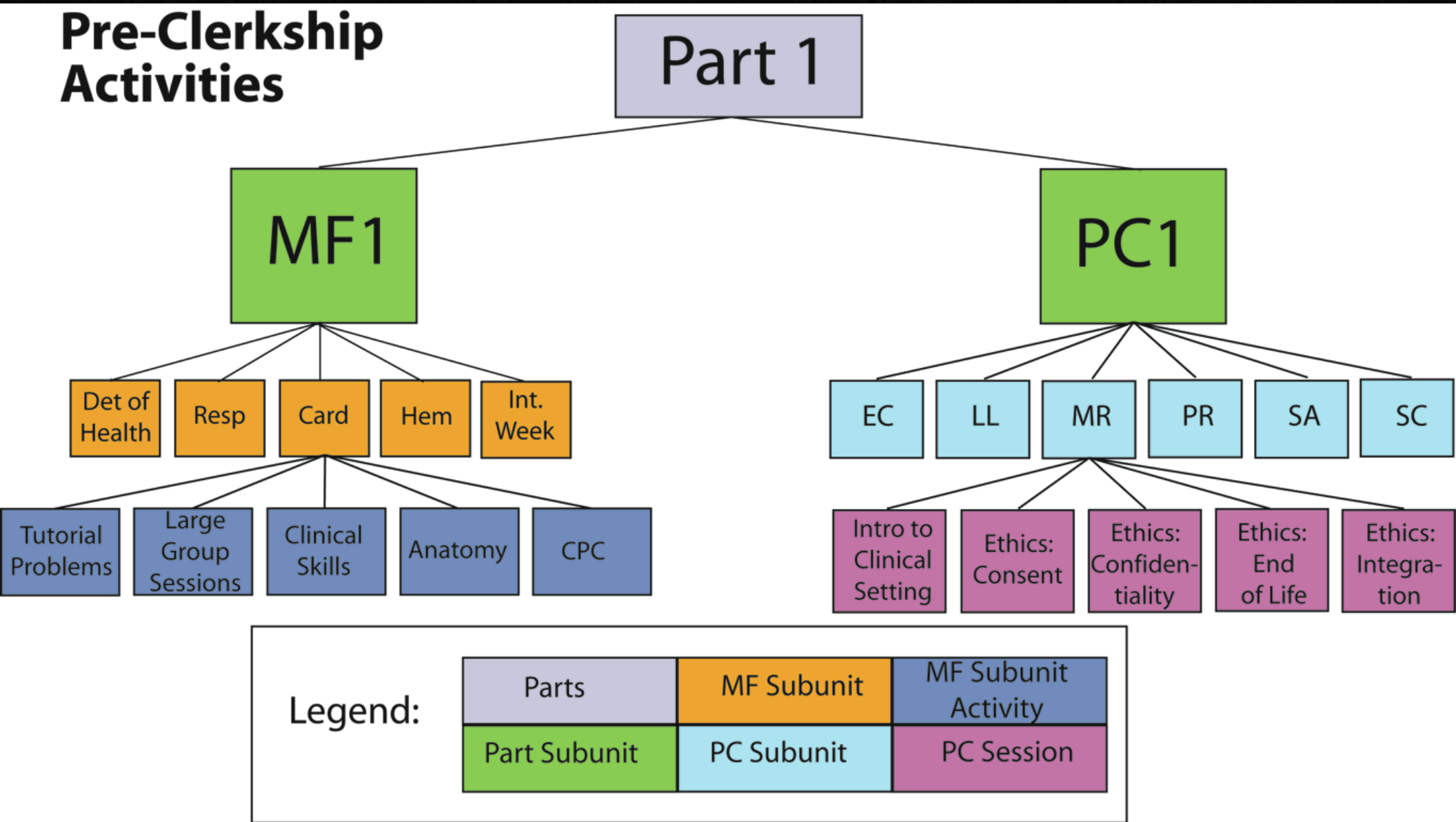

Clerkship Rotation

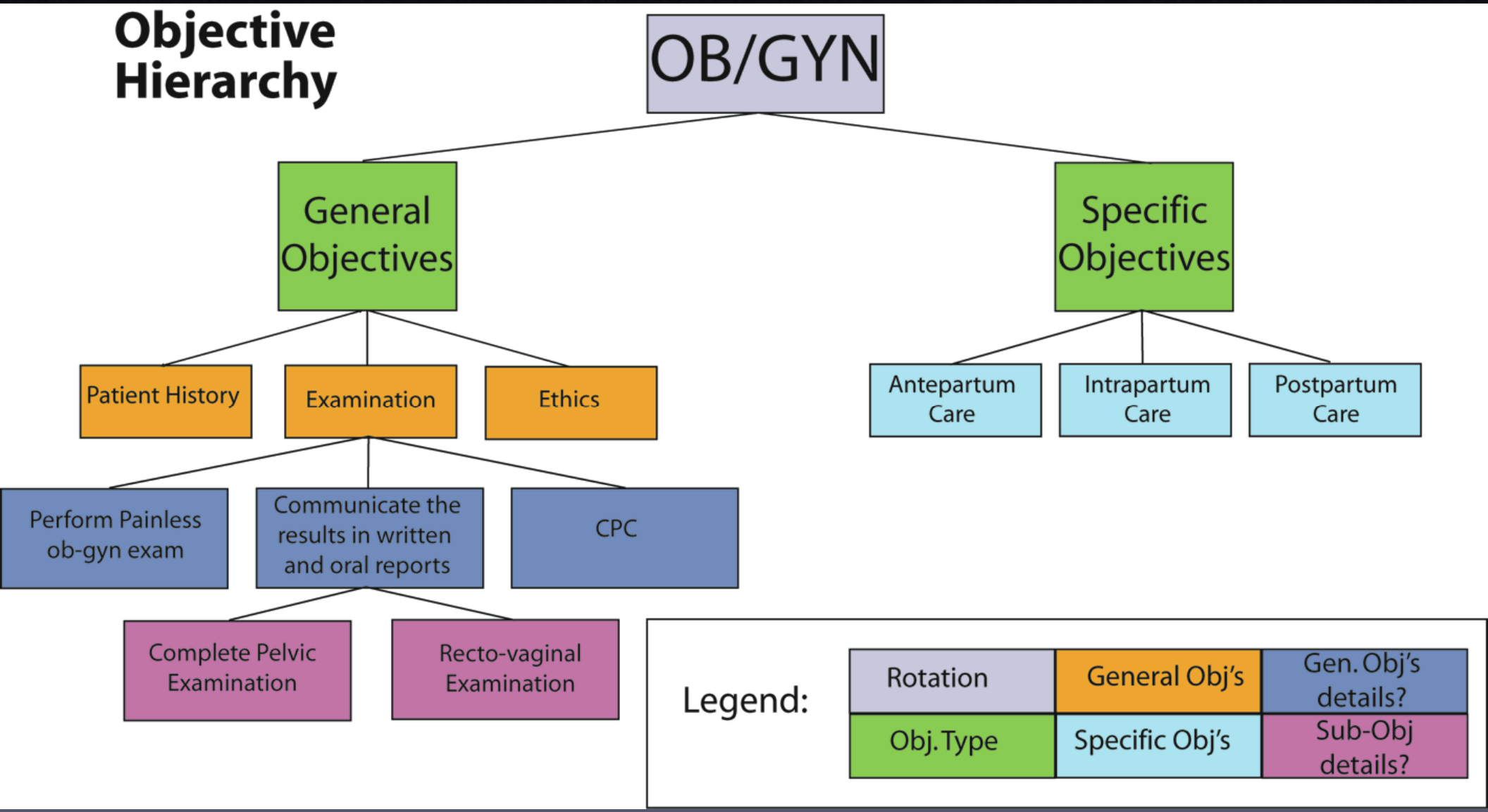

Integration

- horizontal integration
  - within an MF (eg tutorials and large group session); between MF and PC curricula
- vertical integration
  - between different curriculum blocks
  - between pre-clerkship and clerkship

Methods

- Adopt personae of key stakeholders and walk through scenarios (Use Case)
  - identify your key outputs/reports and search requirements a priori
  - e.g. LMCE (CurrMIT), CanMEDS, MCC
- Select relevant indexing based on these requirements

Methods: Process

- Prioritize
  - key indexing facets/taxonomies
  - select activities
  - set limits on the project in terms of initial audiences for the database and activities to index
- May well be an iterative process

Methods: Team

- faculty member who knows the curriculum and its stakeholders well
- library scientist and students with expertise in indexing
- programmer with both database and user interface design skills (or additional team member with interface skills)

McMaster University

Undergraduate MD Curriculum Database

Activities List: Tutorial Problems

Tutorial: Mbunga Mbewe

Tutorial: Mrs. Lee

Activity: Mrs. Lee

Activity Type: Tutorial

Assessment? no

Block: Hematology - Week 2

Description: Oxygen transport (Thalassemia)

Objectives: Upon completion of this case, students should understand how the structure of hemoglobin impacts on its role in oxygen transport.
Describe the development of hemoglobins during embryonal, fetal periods and during infancy. Discuss the transition of various types of hemoglobins to adult hemoglobins.
Describe various hemoglobinopathies and different types of thalassemia (alpha- and beta-thalassemia).
Understand the genetics of thalasssemia.
Explain the role of hemoglobin in gas exchange and discuss the cardiac compensation for anemia.
Discuss the pathophysiology of generalized anasarca with special reference to hydrops fetalis.

Tutorial: Red Selton

Tutorial: Mr. Ooki

Tutorial: Rupert Kelly

Tutorial: Jessica Gray

McMaster University

Home

Browse Activities

- Tutorial Problems
- Large Group Sessions
- PC Sessions
- Personal Progress Index
- Clinical Application Exercises
- PC Dossier Contribution
- Mid-Unit Evaluations
- End-Unit Evaluations
- Clinical Exposure

Administration

- Add / Edit Activities
- Add / Edit Activity Types
- Add / Edit Objectives
- Add / Edit Blocks
- Add / Edit Taxonomies

Undergraduate MD Curriculum Database

Activities List: PC Sessions

PC Session: Interviewing Standardized Patients

PC Session: Epidemiology - Measures of Disease

PC Session: Epidemiology - Research Design

Activity: Epidemiology - Research Design

Activity Type: PC Session

Assessment? no

Block: Hematology - Week 3

Description:

Objectives: Understand strengths and weaknesses of various research designs.
Understand how to recognize RCT, cohort, Case-control.
Understand why some designs are more or less vulnerable to bias.
Understand the trade-off between strength of effect and design bias.

PC Session: Epidemiology - Diagnostic Tests

PC Session: Lifelong Learning - Introduction to Evidence Based Medicine (EBM)

PC Session: Lifelong Learning - Introduction to Evidence Based Medicine (EBM) - Therapy

PC Session: Lifelong Learning - EBM - Prognosis

PC Session: Lifelong Learning - EBM - Qualitative Research

McMaster University

Home

Browse Activities

- Tutorial Problems
- Large Group Sessions
- PC Sessions
- Personal Progress Index
- Clinical Application Exercises
- PC Dossier Contribution
- Mid-Unit Evaluations
- End-Unit Evaluations
- Clinical Exposure

Administration

- Add / Edit Activities
- Add / Edit Activity Types
- Add / Edit Objectives
- Add / Edit Blocks
- Add / Edit Taxonomies

Undergraduate MD Curriculum Database

Search Results for: Ethics and Moral Reasoning

- **PC Dossier Contribution**: Personal Learning Plan - Part 1
- **PC Dossier Contribution**: Personal Learning Plan - Part 2
- **PC Dossier Contribution**: Personal Learning Plan - Part 3
- **PC Dossier Contribution**: Personal Learning Plan - Part 4
- **PC Dossier Contribution**: Reflective Practice Exercise - Social Determinants of Health
- **PC Dossier Contribution**: Reflective Practice Exercise
- **PC Dossier Contribution**: Reflective Practice Exercise - EBM Prognosis
- **PC Dossier Contribution**: Reflective Practice Exercise
- **PC Session**: Lifelong Learning - Introduction to Evidence Based Medicine (EBM)
- **PC Session**: Lifelong Learning - Introduction to Evidence Based Medicine (EBM) - Therapy
- **PC Session**: Lifelong Learning - EBM - Prognosis
- **PC Session**: Lifelong Learning - EBM - Qualitative Research

Found 12 activities

McMaster University

Home

Browse Activities
- Tutorial Problems
- Large Group Sessions
- PC Sessions
- Personal Progress Index
- Clinical Application Exercises
- PC Dossier Contribution
- Mid-Unit Evaluations
- End-Unit Evaluations
- Clinical Exposure

Administration
- Add / Edit Activities
- Add / Edit Activity Types
- Add / Edit Objectives
- Add / Edit Blocks
- Add / Edit Taxonomies

Undergraduate MD Curriculum Database

Activities List

Cardiology - Week 1

Cardiology - Week 2

Mid-Unit Tutorial Evaluation: MF1 Mid-Unit Tutorial Evaluation

Activity Type: Mid-Unit Tutorial Evaluation

Title: MF1 Mid-Unit Tutorial Evaluation

Description:

Time Block: Cardiology - Week 2

Submit

Cardiology - Week 3

Cardiology - Week 4

Add New Activity

Activity Type: Clinical Application Exercise (CAE)

Title:

Description:

McMaster University

Home

Browse Activities

- Tutorial Problems
- Large Group Sessions
- PC Sessions
- Personal Progress Index
- Clinical Application Exercises
- PC Dossier Contribution
- Mid-Unit Evaluations
- End-Unit Evaluations
- Clinical Exposure

Administration

- Add / Edit Activities
- Add / Edit Activity Types
- Add / Edit Objectives
- Add / Edit Blocks
- Add / Edit Taxonomies

Undergraduate MD Curriculum Database

Activity Search

McMaster Professional Competencies: Clinical Skills [Search]

Search By Keyword: [Search]

☐ Search using MeSH

☐ Search using the CanMEDS Roles

Challenges

- Finding the balance
  - structure vs flexibility
  - prescriptive vs descriptive
- Scope of the database
  - granularity vs pragmatism

Challenges

- Differences in preclerkship vs clerkship structures
- importance of relational structure
  - initial database was limited
  - taxonomy management is key
- linkages with Learning Management System

Conclusions

- A curriculum database is a necessary but not sufficient undertaking
- Plan out your functional requirements with multiple stakeholders first
  - focus on key reports and outputs
  - keep the scope manageable
- Assemble a good team

Future

- Finish ‘core’ tagging, implement LOM
- Continue to collect stakeholder feedback
- implementation and evaluation of how the database is integrated into pedagogical delivery and planning
- linkages with other curriculum activities and standards, ‘thesaurus’ data mapping
- visual interfaces or ‘mapping’ presentation layers

Future

- Integration with Curriculum Management System
  - Learning Paths to link objectives and activities; provide reporting and tracking (personal learning portfolio)
- Creation of dynamic programs and learning paths based on taxonomies, and full web services to taxonomies
  - e.g. the ‘diabetes program’

Discussion